PRODUCT DATA SHEET

GARCYA

PQ-LIGY

- Aluminum Base+PC Milky Cover, IK10
- Lifud driver with PF>0.95, 2835 Chips with LM80
- Great heat dissipation, customized length

5 YEAR WARRANTY

Lifespan 50,000 HOURS

CRI 80+ Ra

>0.95 Power Factor

IP54 IP LEVEL

120° Beam Angle

LISTINGS

RoHS CE LM79

SPECIFICATIONS

Wattage	80W	Beam Angle	120°
Input Voltage	100-240Vac	CCT	4000K/5000K (upon at request: 3000K/6500K)
Luminous Flux	8800LM	CRI	> 80
Efficacy	110LM/W	Working Temp.	-30°C ~ +45°C
LED Chip	2835	Power Factor	> 0.95
Driver	LiFud / Fahold	Lifetime	L70B20 50,000 Hours
LED Quantity	600PCS	IP Rate	IP54
MacAdam Ellips	Within 5 Steps	Certificates	CE , RoHS , LM79
Warranty	5 years		

GARCYA

PQ-LIGY

DIMENSIONS

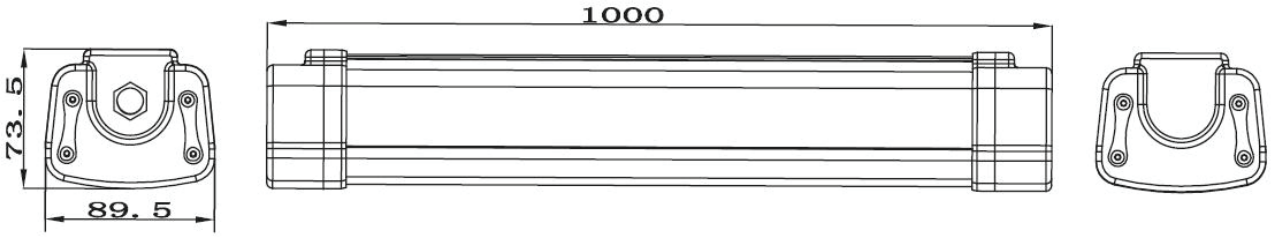
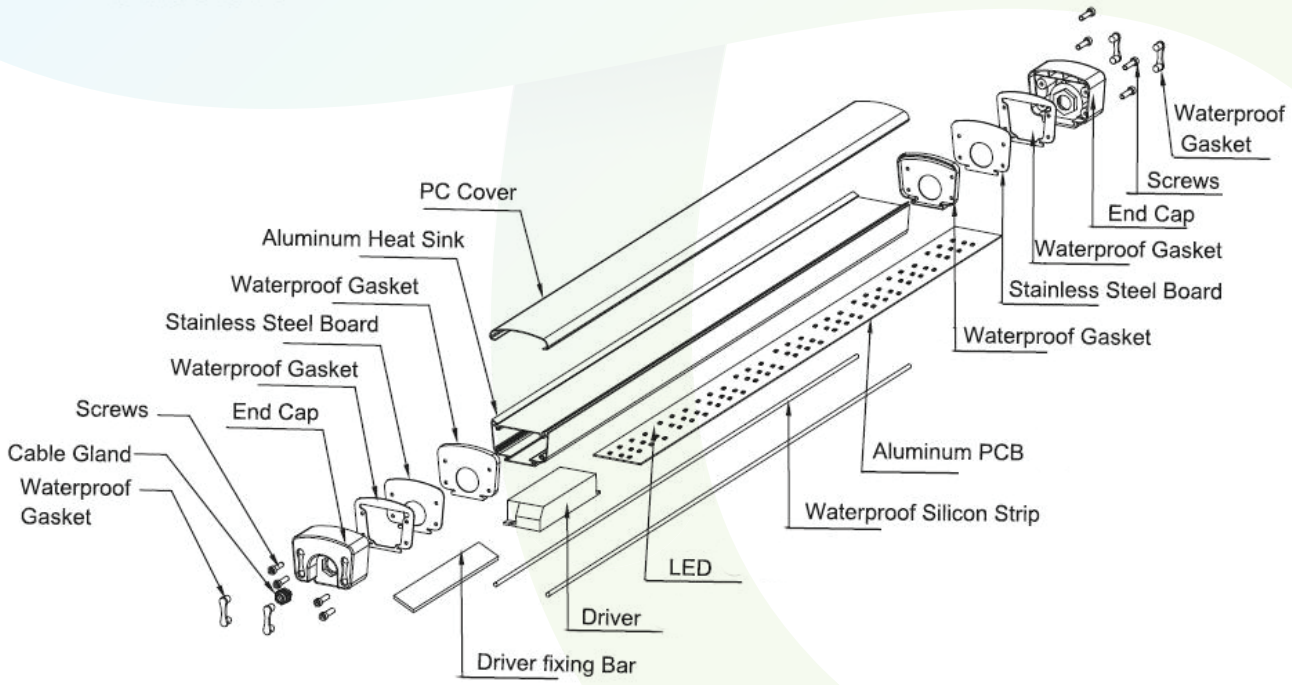
STRUCTURE