PRODUCT DATA SHEET

HIGH BAY

PQ-HBSG9

With unique high-purity die-cast aluminum heat sink, high-brightness SMD chip, high-efficiency constant current constant voltage power driver, our intelligent control LED high bay is designed for factories, workshops, warehouses, highway toll stations, gas stations. supermarkets, exhibition halls, stadiums and similar applications.

- Multiple mounting options to suit different uses of the product
- Die-cast aluminum heat sink is lightweight and attractive with excellent corrosion resistance
- 320mm diameter allows for a large aperture
- Square or round driver housing
- 120° beam angle in glass or PC (IK08 when using glass lens)
- Meets the needs of the harsh environment of industrial plants
- Black and white options

MODEL	POWER	LUMENS	LED QTY	WEIGHT
PQ-HBSG9-XXK-100	100W	15000	224	4.2 ± 0.5 kg
PQ-HBSG9-XXK-150	150W	22500	280	
PQ-HBSG9-XXK-200	200W	30000	455	4.8 ± 0.5 kg
PQ-HBSG9-XXK-240	240W	36000	532	

ADD at the end Voltage 120V, 240V or 347V
XX= Color Temperature 31K=3000-3500K 41K=4000-4500K 51K=5000-5500K 61K=6000-6500K

SPECIFICATIONS

Power supply	Sosen/Meanwell isolated	System efficiency	>90%
Input voltage	AC100-277V/AC200-480V	Beam angle	120°
Power frequency	50/60 Hz	IP rating	IP65
Power efficiency	>91%	Lens material	PC/Glass
Power factor	0.93	Heat sink	Die-cast aluminum
Total harmonic distortion	<15%	Lifetime	L70 > 54000 H
LED type	Lumileds	Operating temperature	−30°~+50°C
Efficiency	150 lm/W	Dimensions	Φ320 x H 134mm
CCT	4000K/5000K/5700K/6500K	Carton size	390 x 390 x 220 mm (1 pc)
CRI	>80Ra		

9600 Boul St-Laurent, Suite 300, Montreal, Quebec - H2N 1R1 • Tel: 514 667-6810 / Fax : 514 667-5722 • info@power-q.ca

www.power-q.ca

HIGH BAY

PQ-HBSG9

JUNCTION BOX
Convenient for wiring by junction box (optional)

BETTER HEAT SINK
The separation between power source and lamp body, plus the ventilation design, assure that the heat generated by the power source does not affect the lamp body.

LONG SERVICE LIFE – LESS LIGHT DECAY
78% luminous flux maintenance rate over a lifetime of 54000 hours.

SUITABLE FOR HARSH ENVIRONMENTS
Meets the needs of industrial settings.

ACCESSORIES

WIRE GUARD
Protects glass from flying objects.

REFLECTORS
Aluminum reflectors compatible with PC

Aluminum shade

PC shade

MICROWAVE MOTION SENSOR, AUTOMATIC SWITCHING AND DIMMING

HIGH BAY

PQ-HBSG9

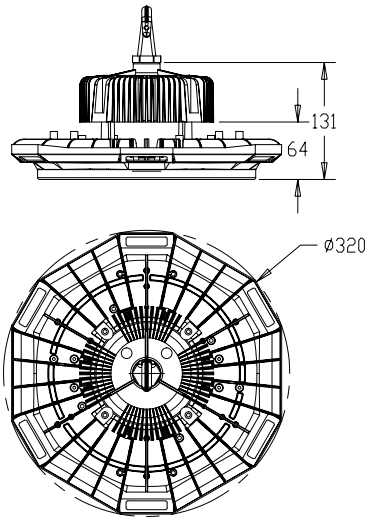

100W / 150W

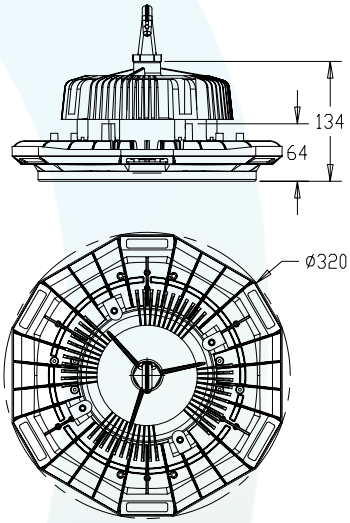

200W / 240W

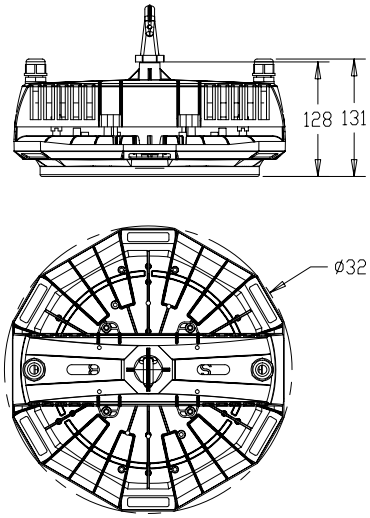

Square driver housing:
100W/150W
200W/240W

INSTALLATION OPTIONS

HOOK

RING

SURFACE MOUNT
BRACKET

HIGH BAY

PQ-HBSG9

INSTALLATION

METHOD 1

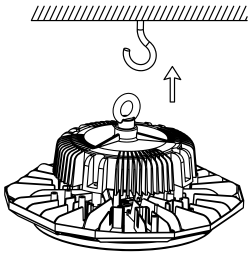

1. Drill a hole in the ceiling and install a hook

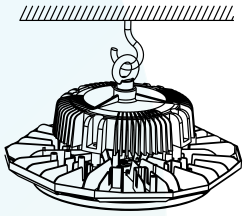

2. Hang the fixture

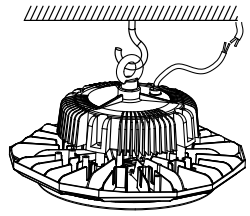

All wiring terminates inside the junction box.

3. Connect the cables: black-L, white-N yellow green-Ground. Take care of the waterproof processing.

METHOD 2

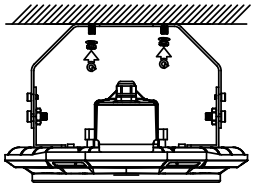

1. Attach the bracket

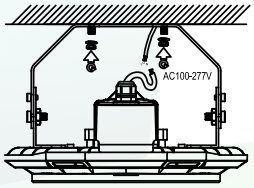

All wiring terminates inside the junction box.

2. Connect the cables: black-L, white-N yellow green-Ground. Take care of the waterproof processing.

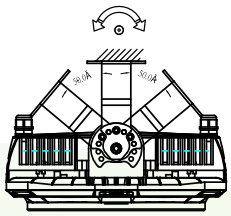

3. Adjust the bracket to the desired angle.

METHOD 3

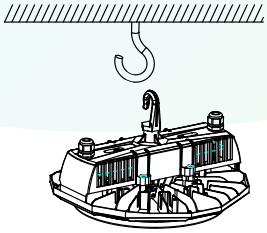

1. Drill a hole in the ceiling and install a hook

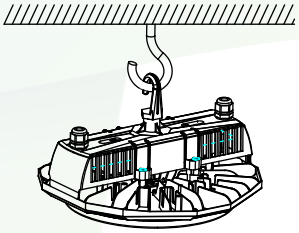

2. Hang the fixture

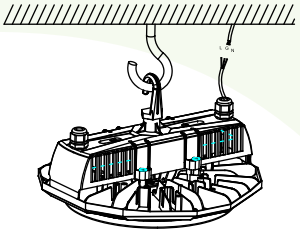

3. Connect the cables: black-L, white-N yellow green-Ground. Take care of the waterproof processing.

METHOD 4

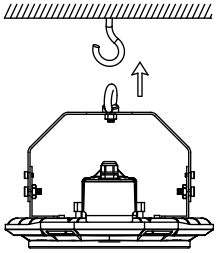

1. Drill a hole in the ceiling and install a hook

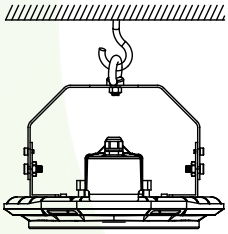

2. Hang the fixture

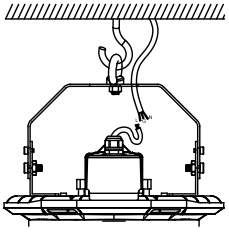

3. Connect the cables: black-L, white-N yellow green-Ground. Take care of the waterproof processing.

WIRING DIAGRAM

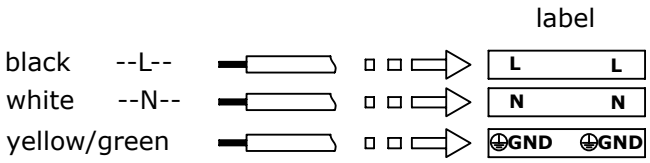

1-10V DIMMABLE

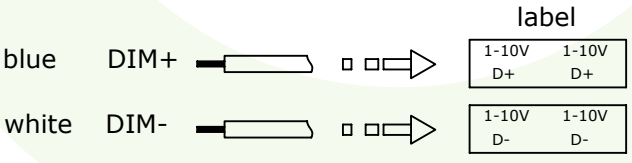

9600 Boul St-Laurent, Suite 300, Montreal, Quebec H2N 1R1 • Tel: 514 667-6810 / Fax : 514 667-5722 • info@power-q.ca

www.power-q.ca